PC8AIIS

CANopen

IO Module

User Manual

PROCON ELECTRONICS

P.O.Box 164
Seven Hills 1730
NSW
AUSTRALIA

Tel: +61 2 96248376
Fax: +61 2 9620 8709
Email: proconel@proconel.com
Web: www.proconel.com

27/08/2014 V1.0

Disclaimer

Procon Electronics makes no representations or warranties with respect to the contents hereof. In addition, information contained herein are subject to change without notice. Every precaution has been taken in the preparation of this manual. Nevertheless, Procon Electronics assumes no responsibility, express or implied, for errors or omissions or any damages resulting from the use of the information contained in this publication.

All trademarks belong to their respective owners.

TABLE OF CONTENTS

1. INTRODUCTION 5
2. TECHNICAL SPECIFICATION 6
3. PHYSICAL INFORMATION 7
3.1 PHYSICAL DIMENSIONS 7
3.2 DIN RAIL BUS ADAPTOR 8
3.3 INSTALLING THE MODULE ONTO THE DIN RAIL 8
3.4 REMOVING THE MODULE FROM THE DIN RAIL 9
3.5 GROUNDING/SHIELDING 9
3.6 NETWORK TERMINATION 9
4. SETTING THE NODE ID AND BAUD RATE 10
4.1 CHANGING THE DIP SWITCH TO SET THE NODE ID AND BAUD RATE 10
4.2 SETTING THE NODE ID USING THE DIP SWITCHES 11
4.3 SETTING THE BAUD RATE USING THE DIP SWITCHES 11
4.4 SETTING THE NODE ID USING SOFTWARE 11
4.5 SETTING THE BAUD RATE USING SOFTWARE. 12
5. WIRING 13
5.1 POWER SUPPLY AND COMMUNICATIONS WIRING 13
5.2 WIRING THE ANALOG INPUTS 14
6. INDICATORS 15
6.1 FRONT PANEL INDICATORS 15
6.2 RUN INDICATOR (R) 16
6.3 ERROR INDICATOR (T) 16
7. IMPLEMENTED CANOPEN OBJECTS 17
7.1 OBJECT BLOCK DIAGRAMS 17
7.1.1 Block diagram for analog inputs 17
7.2 COMMUNICATION SEGMENT 18
7.2.1 Object 1000h: Device Type 18
7.2.2 Object 1001h: Error Register 18
7.2.3 Object 1003h: Pre-defined Error Field 19
7.2.4 Object 1005h: COB-ID SYNC 22
7.2.5 Object 1008h: Manufacturer Device Name 22
7.2.6 Object 1009h: Manufacturer Hardware Version 23
7.2.7 Object 100Ah: Manufacturer Software Version 23
7.2.8 Object 100Ch: Guard Time 24
7.2.9 Object 100Dh: Life Time Factor 24
7.2.10 Object 1010h: Store Parameter Field 25
7.2.11 Object 1011h: Restore Default Parameters 27
7.2.12 Object 1014h: COB-ID EMCY 29
7.2.13 Object 1015h: Inhibit Time Emergency 29
7.2.14 Object 1016h: Heartbeat Consumer Entries 30
7.2.15 Object 1017h: Producer Heartbeat Time 31
7.2.16 Object 1018h: Identity Object 32
7.2.17 Object 1019h: Synchronous counter overflow value 33
7.2.18 Object 1029h: Error Behaviour 34
7.2.19 Object 1200h: Server SDO Parameter 1 35

7.2.20 Object 1801h: Transmit PDO Communication Parameter 2 36
7.2.21 Object 1802h: Transmit PDO Communication Parameter 3 38
7.2.22 Object 1803h: Transmit PDO Communication Parameter 4 40
7.2.23 Object 1804h: Transmit PDO Communication Parameter 5 42
7.2.24 Object 1A00h: Transmit PDO Mapping Parameter 2 44
7.2.25 Object 1A02h: Transmit PDO Mapping Parameter 3 45
7.2.26 Object 1A03h: Transmit PDO Mapping Parameter 4 47
7.2.27 Object 1A04h: Transmit PDO Mapping Parameter 5 48
7.3 MANUFACTURER SEGMENT 50
7.3.1 Object 2001h: Module ID 50
7.3.2 Object 2002h: Module Baud Rate 50
7.3.3 Object 2003h: Module DIP Switch 51
7.3.4 Object 2310h: Analog Input Enable 51
7.3.5 Object 2314h: Analog Input Line Frequency 53
7.3.6 Object 2318h: Analog Input Sample Rate 53
7.3.7 Object 2320h: Calibrate Channel Number 55
7.3.8 Object 2321h: Calibrate Control 55
7.3.9 Object 2323h: Calibrate Raw Data 55
7.3.10 Object 2340h: Analog Input Status 56
7.4 DEVICE PROFILE SEGMENT 57
7.4.1 Object 6401h: Read Analog Input 16 Bit 57
7.4.2 Object 6403h: Read Analog Input float 58
7.4.3 Object 6423h: Global Analog Interrupt Enable 60
7.4.4 Object 6424h: Analog Input Interrupt Upper Limit 60
7.4.5 Object 6425h: Analog Input Interrupt Lower Limit 62
7.4.6 Object 6426h: Analog Input Interrupt Delta 63
7.4.7 Object 6429h: Analog Input Interrupt Real Upper Limit 65
7.4.8 Object 642Ah: Analog Input Interrupt Real Lower Limit 66
7.4.9 Object 642Bh: Analog Input Interrupt Real Delta 68

8. SAFETY GUIDELINES 70

8.1 INTRODUCTION 70
8.2 INTENDED USE 70
8.3 TRANSPORT AND STORAGE 70
8.4 INSTALLATION 70

1. Introduction

The PC8AIIS is an 8 channel current input module. The inputs are divided into 4 isolated circuits. The module uses differential inputs to reduce effects of electrical noise and mains pickup. This module is ideal for monitoring existing 4-20mA current loops which are isolated from each other and cannot be connected to a common point of reference.

The module plugs into a special bus connector which fits inside the DIN rail. The power supply voltage and the CAN bus signals are connected via this bus connector.

The CAN interface is electrically isolated and is compliant with ISO 11898.

The module has been equipped with status led's which are used to indicate the status of the Inputs and communications. This visual indication assists with fault finding and diagnostics.

The CANopen node ID and bit rate can be setup by DIP switches or software.

2. Technical Specification

Power Supply	Logic Supply Voltage	12 -24 Vdc
	Logic Supply Current	86mA @ 12V / 45mA @ 24V
TC Inputs	Input Points	8 (isolated in pairs)
	Input Current	0 to +/-20 mA
	Input Resistance	122 ohms
	Drift	50ppm/°C Typ.
	Input update rate	12ms - 100ms (selectable)
	Isolation	1500Vrms between field and logic
CANopen Data	NMT	Slave
	Error Control	Node Guarding / Consumer Heartbeat
	Node ID	DIP switch or software
	Number of PDO	4 Tx
	PDO Modes	Event Controlled Asynchronous, Event Timer Asynchronous, Sync - Acyclic, Sync – Cyclic.
	PDO Mapping	Variable
	PDO Linking	Supported
	Number of SDO	1 Server
	Error Message	Yes
Temperature	Operating Temperature.	-20°C to + 70°C
	Storage Temperature	-40°C to + 85°C
Connectors	Logic Power and Comms.	5 way connector that clips onto DIN rail
	Inputs	4 x 3 Way screw connector on top and bottom

3. Physical Information

3.1 Physical Dimensions

The PC8AIIS enclosure is shown below. The module clips directly onto an industry standard DIN rail. Field wiring is on the top and bottom of the module via 6 plug-in connectors. The module power and CAN communications wiring is on a separate connector which clips onto the DIN rail on the back of the housing.

Allow at least 25mm on top and below the module to accommodate the wiring. Ensure that enough space is kept above and below the module for good ventilation.

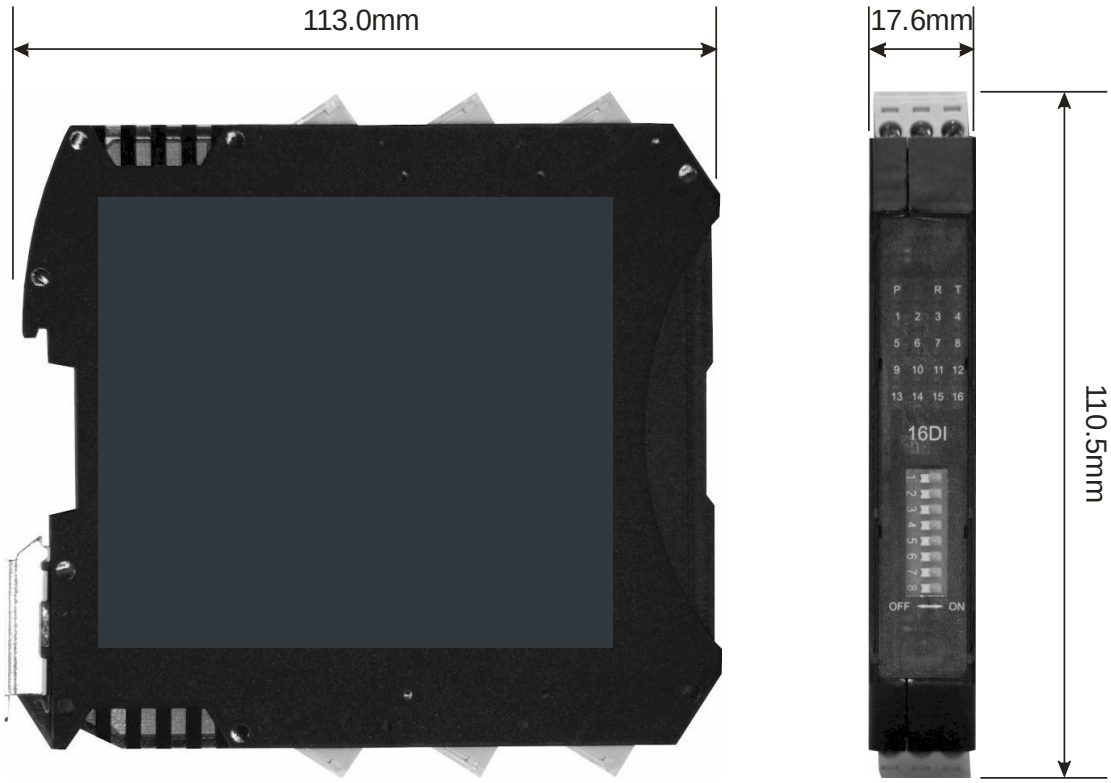

3.2 DIN rail Bus adaptor

The BUS connector allows side-by-side installation of the Modules. The picture below shows multiple BUS connectors installed on a DIN rail. First, install the BUS connector onto the DIN rail, then slide into the adjacent BUS connector.

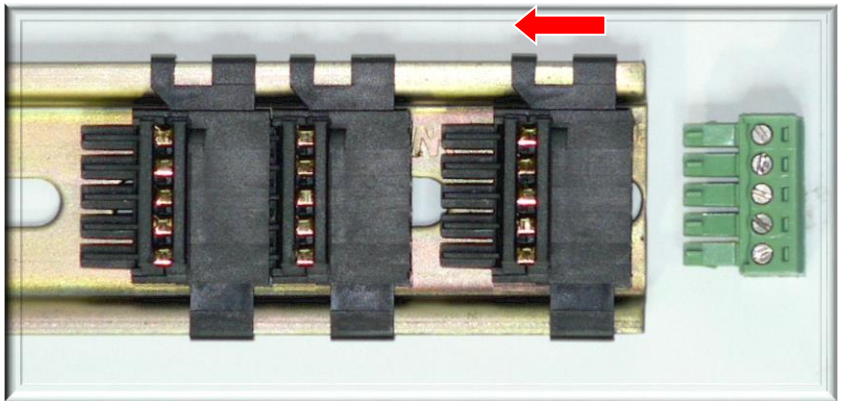

3.3 Installing the module onto the DIN rail

The modules are designed to be installed on a standard 35 mm DIN rail. Snap the BUS connector first into the rail as shown above. Next clip the top of the module onto the DIN rail and pivot the Module onto the DIN rail. The spring loaded clasp will latch around onto the DIN resulting in a firmly seated product. Do not force the module onto the connector otherwise the module or connector may be damaged.

Note: The modules are not designed for hot plug in. The power must be turned off before the modules are plugged into the base.

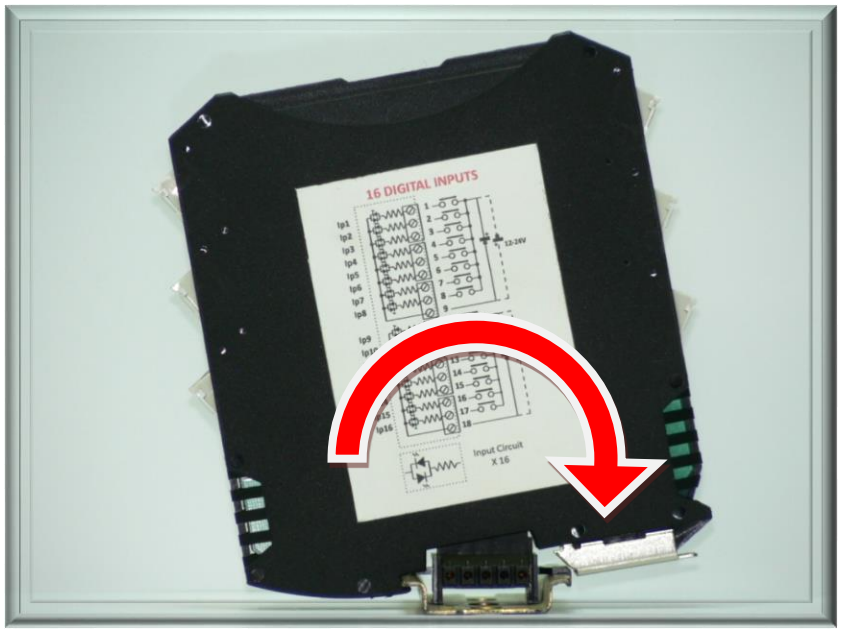

3.4 Removing the module from the DIN rail

To remove the module from the DIN Rail, use a flat blade screwdriver to pry the spring loaded clasp away from the DIN rail in the manner shown in the picture below. Next pivot the module up and away from the DIN rail and remove.

3.5 Grounding/Shielding

In most cases, the modules will be installed in an enclosure along with other devices which generate electromagnetic radiation. Examples of these devices are relays and contactors, transformers, motor controllers etc. This electromagnetic radiation can induce electrical noise into both power and signal lines, as well as direct radiation into the module causing negative effects on the system. Appropriate grounding, shielding and other protective steps should be taken at the installation stage to prevent these effects. These protective steps include control cabinet grounding, module grounding, cable shield grounding, protective elements for electromagnetic switching devices, correct wiring as well as consideration of cable types and their cross sections.

3.6 Network Termination

Transmission line effects often present a problem on data communication networks. These problems include reflections and signal attenuation.

To eliminate the presence of reflections from the end of the cable, the cable must be terminated at both ends with a resistor across the line equal to its characteristic impedance. Both ends must be terminated since the direction of propagation is bi-directional. This termination is typically 120 ohms.

4. Setting the Node ID and baud rate

The DIP switches are provided to manually configure the module node ID and baud rate. Switches 1 through 5 set the node ID sequentially starting at 1 and ending at 31. Switches 6, 7 & 8 set the baud rate. When the ID switches are all set to zero, the ID is taken from internal memory. When the baud rate switches are all set to zero, the baud rate is taken from the internal memory. The user must first configure the module by writing the correct values to the module.

4.1 Changing the DIP switch to set the Node ID and baud rate

The software in the module samples the dip switches on a reset when the power is cycled. Once sampled, the software writes the settings to the CAN port. The user is welcome to change the dip switches while the module is powered, however, a reset must be initiated afterward.

The DIP switch can be toggled using a small flat blade screwdriver, or equivalent tool, as shown in the picture below.

4.2 Setting the Node ID using the DIP switches

The following table assists with the setting up of DIP switches for the required NODE ID.

NODE ID	SWITCH SETTING							
	SW8	SW7	SW6	SW5	SW4	SW3	SW2	SW1
Software	-	-	-	Off	Off	Off	Off	Off
1	-	-	-	Off	Off	Off	Off	On
2	-	-	-	Off	Off	Off	On	Off
3	-	-	-	Off	Off	Off	On	On
4	-	-	-	Off	Off	On	Off	Off
4	-	-	-	Off	Off	On	Off	On
6	-	-	-	Off	Off	On	On	Off
-	-	-	-	-	-	-	-	-
31	-	-	-	On	On	On	On	On

4.3 Setting the Baud Rate using the DIP switches

The following table assists with the setting up of DIP switches for the required Baud Rate.

BAUD RATE	SWITCH SETTING							
kbits/s	SW8	SW7	SW6	SW5	SW4	SW3	SW2	SW1
Software	Off	Off	Off					
20	Off	Off	On	-	-	-	-	-
50	Off	On	Off	-	-	-	-	-
125	Off	On	On	-	-	-	-	-
250	On	Off	Off	-	-	-	-	-
500	On	Off	On	-	-	-	-	-
800	On	On	Off	-	-	-	-	-
1000	On	On	On	-	-	-	-	-

4.4 Setting the Node ID using software.

In order to use the node ID from memory, ensure that all of the node ID dip switches are in the OFF position.

Before the internal node id is selected, the user must first write the correct id value to the Module ID object in the manufacturer segment. The object address is 2001h.

The node id can be configured from 1 to 127.

4.5 Setting the baud rate using software.

In order to use the baud rate from memory, ensure that all of the baud rate dip switches are in the OFF position.

Before the internal baud rate is selected, the user must first write the correct baud rate value to the Module Baud Rate object in the manufacturer segment. The object address is 2002h.

The following baud rates are supported.

BAUD RATE	OBJECT VALUE (2002h)
kbits/s	
20	1
50	2
100	3
125	4
250	5
500	6
800	7
1000	8

5. Wiring

5.1 Power supply and Communications Wiring

The following diagram shows the wiring for the power and CAN communications.

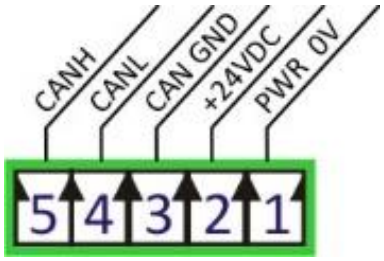

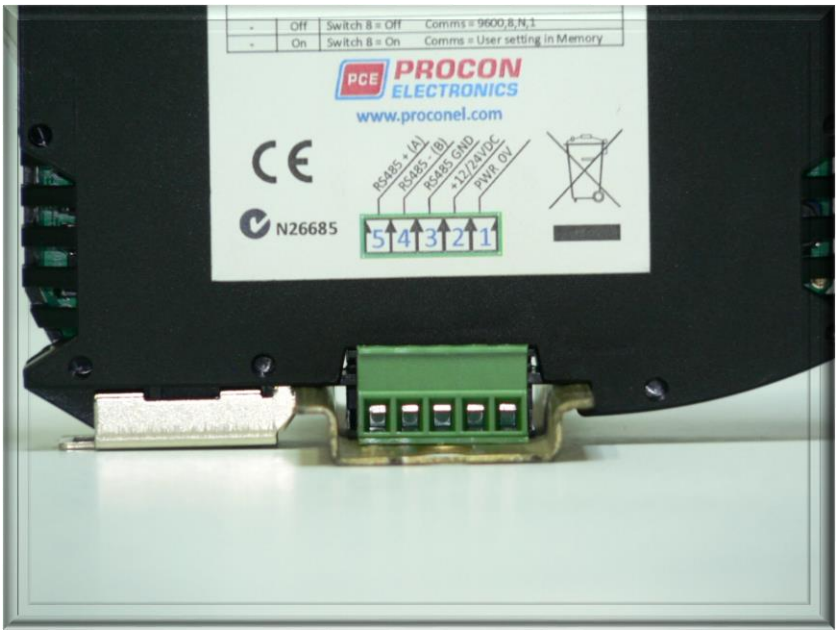

Terminal		Description
1	**Power 0V**	The DC power supply 0V connection.
2	**Power +24V**	The DC power supply positive connection. 12V to 24VDC.
3	**CAN GND**	The CAN circuit is isolated from the DC power supply for the module. The CAN GND connection is not connected to the DC power supply GND. Use a separate ground wire to connect all of the CAN GND terminals on the modules together. This ensures that all of the modules are at the same potential. The ground wire must be earthed at one end only.
4	**CANL**	CANL network connection
5	**CANH**	CANH network connection

5.2 Wiring the analog inputs

The following diagram shows how the inputs are connected to a thermocouple.

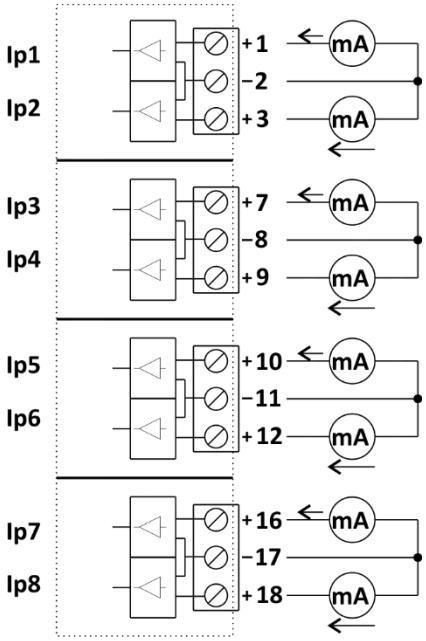

6. Indicators

6.1 Front panel indicators

The CAN communications uses an error LED (T) and a run LED (R). The run LED indicates the CANopen state. The error LED is shows errors of the network.

Power: Flashes to indicate the CPU is running.
CAN (R): Indicates the CANopen run state.
CAN (T): Indicates a CANopen error.
Input Status: "OFF" when the input is greater than zero and less than 20mA.
"ON" when the input is over range, greater or equal to 20mA.

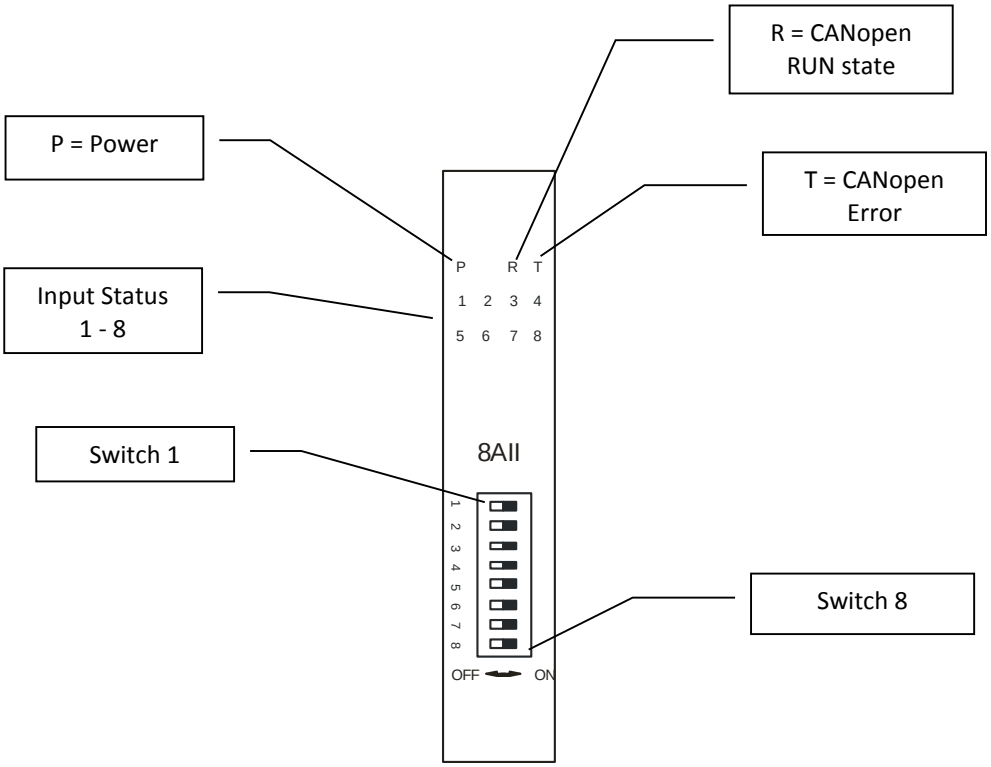

6.2 Run indicator (R)

RUN LED	State	Description
Single flash	STOPPED	The device is in STOPPED state.
Blinking	PRE-OPERATIONAL	The device is in PRE- OPERATIONAL state.
On	RUN	The device is in RUN state.

6.3 Error indicator (T)

ERROR LED	State	Description
Off	no error	The device is in working condition.
Single flash	warning limit reached	At least one of the error counters of the CAN controller has reached or exceeded the warning limit.
Double flash	Error Control Event	A guard event (NMT- Slave or NMT-Master) or a Heartbeat event has occurred.
On	Bus Off	The CAN controller is bus-off.

7. Implemented CANopen Objects

7.1 Object Block Diagrams

7.1.1 Block diagram for analog inputs

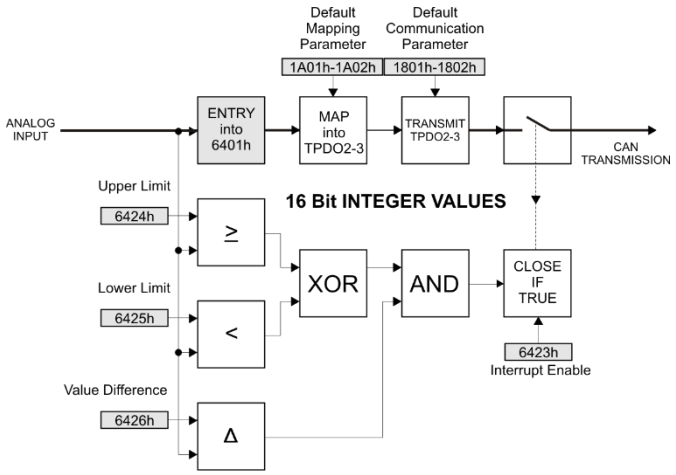

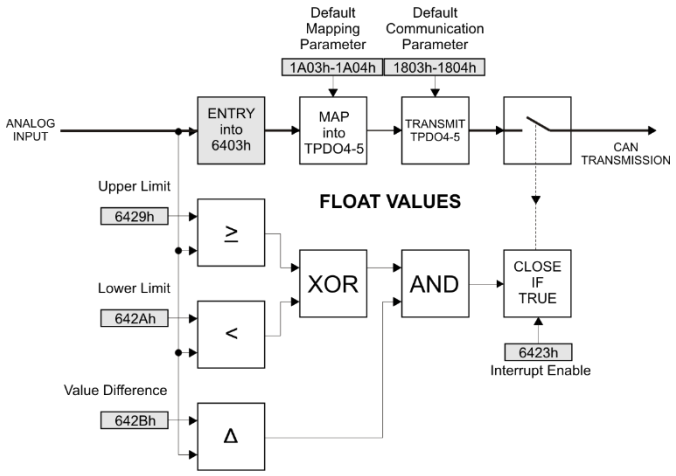

7.2 Communication Segment

7.2.1 Object 1000h: Device Type

The device type specifies the kind of device. The lower 16 bit contain the device profile number and the upper 16 bit an additional information.

INDEX	1000
Name	Device Type
Object Code	Variable
Data Type	UNSIGNED32
Access	CONST
PDO Mapping	No
Default Value	0x00040191

7.2.2 Object 1001h: Error Register

The error register is a field of 8 bits, each for a certain error type. If an error occurs the bit has to be set.

Bit	Meaning
0	generic error
1	-
2	-
3	-
4	communication error (overrun, error state)
5	-
6	-
7	-

INDEX	1001
Name	Error Register
Object Code	Variable
Data Type	UNSIGNED8
Access	RO
PDO Mapping	No
Default Value	0x00

7.2.3 Object 1003h: Pre-defined Error Field

This object holds errors that have occurred on the device and have been signalled via Emergency Object. It is an error history.
Writing to sub index 0 deletes the entire error history.

ERROR	CODE
Communications Error	0x8100
CAN Overrun Error	0x8110
CAN in error passive	0x8120
Heart Beat or life guard error	0x8130
CAN recovered from bus-off	0x8140
PDO not processed due the length	0x8210
PDO length exceeded	0x8220
Analog Input Error	0xFF10

INDEX	1003
Name	Pre-defined Error Field
Object Code	Array
Data Type	UNSIGNED32

Sub-Index	000
Description	Number of Errors
Access	RW
PDO Mapping	No
Default Value	0x00000000
Sub-Index	001
Description	Standard Error Field
Data Type	UNSIGNED32
Access	RO
PDO Mapping	No
Default Value	0x00000000
Sub-Index	002
Description	Standard Error Field
Data Type	UNSIGNED32

Access	RO
PDO Mapping	No
Default Value	0x00000000
Sub-Index	003
Description	Standard Error Field
Data Type	UNSIGNED32
Access	RO
PDO Mapping	No
Default Value	0x00000000
Sub-Index	004
Description	Standard Error Field
Data Type	UNSIGNED32
Access	RO
PDO Mapping	No
Default Value	0x00000000
Sub-Index	005
Description	Standard Error Field
Data Type	UNSIGNED32
Access	RO
PDO Mapping	No
Default Value	0x00000000
Sub-Index	006
Description	Standard Error Field
Data Type	UNSIGNED32
Access	RO
PDO Mapping	No

Default Value	0x00000000
Sub-Index	007
Description	Standard Error Field
Data Type	UNSIGNED32
Access	RO
PDO Mapping	No
Default Value	0x00000000
Sub-Index	008
Description	Standard Error Field
Data Type	UNSIGNED32
Access	RO
PDO Mapping	No
Default Value	0x00000000
Sub-Index	009
Description	Standard Error Field
Data Type	UNSIGNED32
Access	RO
PDO Mapping	No
Default Value	0x00000000
Sub-Index	010
Description	Standard Error Field
Data Type	UNSIGNED32
Access	RO
PDO Mapping	No
Default Value	0x00000000

7.2.4 Object 1005h: COB-ID SYNC

COB-ID of the Synchronization object.
The device generates a SYNC message if bit 30 is set.
The meaning of other bits is equal to the other communication objects.

INDEX	1005
Name	COB-ID SYNC
Object Code	Variable
Data Type	UNSIGNED32
Access	RW
PDO Mapping	No
Default Value	0x00000080

7.2.5 Object 1008h: Manufacturer Device Name

Contains the device name.

INDEX	1008
Name	Manufacturer Device Name
Object Code	Variable
Data Type	VISIBLE_STRING
Access	CONST
PDO Mapping	No
Default Value	PC8AIIS

7.2.6 Object 1009h: Manufacturer Hardware Version

Contains the device hardware version.

INDEX	1009
Name	Manufacturer Hardware Version
Object Code	Variable
Data Type	VISIBLE_STRING
Access	CONST
PDO Mapping	No
Default Value	V01.00

7.2.7 Object 100Ah: Manufacturer Software Version

Contains the device software version.

INDEX	100A
Name	Manufacturer Software Version
Object Code	Variable
Data Type	VISIBLE_STRING
Access	CONST
PDO Mapping	No
Default Value	V01.00

7.2.8 Object 100Ch: Guard Time

This entry contains the guard time in milli-seconds.
It is 0, if not used.

INDEX	100C
Name	Guard Time
Object Code	Variable
Data Type	UNSIGNED16
Access	RW
PDO Mapping	No
Default Value	0x00000000
Unit	ms

7.2.9 Object 100Dh: Life Time Factor

The life time factor multiplied with the guard time gives the life time for the device.
It is 0, if not used.

INDEX	100D
Name	Life Time Factor
Object Code	Variable
Data Type	UNSIGNED8
Access	RW
PDO Mapping	No
Default Value	0x00000000

7.2.10 Object 1010h: Store Parameter Field

This entry supports saving of parameters in non-volatile memory.
With a read access the device provides information about its saving capabilities. Several parameter groups are distinguished.

Sub index 1 : all parameters
Sub index 2 : communication parameters
Sub index 3 : application parameters
Sub index 4 - 127: manufacturer defined parameters

For saving the signature "save" (0x65766173) must be written.

The following parameters can be saved or loaded:

Communication Parameter	Object
COB-ID SYNC	1005h
Guard Time	100Ch
Life Time Factor	100Dh
COB-ID EMCY	1014h
Heartbeat Consumer Entries	1016h
Producer Heartbeat Time	1017h
Synchronous counter overflow	1019h
PDO length exceeded	1029h
Manufacturer Specific Parameter	Object
Module ID	2001h
Module Baud Rate	2002h
Analog Input Enable	2310h
Analog Input Line Frequency	2314h
Analog Input Filter Type	2317h
Analog Input Sample Rate	2318h
Application Parameter	Object
Global Analog Interrupt Enable	6423h
Analog Input Interrupt Upper Limit	6424h
Analog Input Interrupt Lower Limit	6425h
Analog Input Interrupt Delta	6426h
Analog Input Interrupt Real Upper Limit	6429h
Analog Input Interrupt Real Lower Limit	642Ah
Analog Input Interrupt Real Delta	642Bh

INDEX	1010
Name	Store Parameter Field
Object Code	Array
Data Type	UNSIGNED32
Sub-Index	000
Description	Number of Entries
Access	RO

PDO Mapping	No
Default Value	0x4

Sub-Index	001
Description	Save all Parameters
Data Type	UNSIGNED32
Access	RW
PDO Mapping	No
Default Value	0x00000000
Sub-Index	002
Description	Save Communication Parameters
Data Type	UNSIGNED32
Access	RW
PDO Mapping	No
Default Value	0x00000000
Sub-Index	003
Description	Save Application Parameters
Data Type	UNSIGNED32
Access	RW
PDO Mapping	No
Default Value	0x00000000
Sub-Index	004
Description	Save Manufacturers Parameters
Data Type	UNSIGNED32
Access	RW
PDO Mapping	No

Default Value	0x00000000

7.2.11 Object 1011h: Restore Default Parameters

This entry supports restoring of default parameters.
With a read access the device provides information about its capabilities to restore these values.
Several parameter groups are distinguished.

Sub index 1 : all parameters
Sub index 2 : communication parameters
Sub index 3 : application parameters
Sub index 4 - 127: manufacturer defined parameters

For restoring the signature "load" (0x64616f6c) must be written.

INDEX	1011
Name	Restore Default Parameters
Object Code	Array
Data Type	UNSIGNED32

Sub-Index	000
Description	Number of Entries
Access	RO
PDO Mapping	No
Default Value	0x4
Sub-Index	001
Description	Restore all Default Parameters
Data Type	UNSIGNED32
Access	RW
PDO Mapping	No
Default Value	0x00000000
Sub-Index	002
Description	Restore Communication Default Parameters

Data Type	UNSIGNED32
Access	RW
PDO Mapping	No
Default Value	0x00000000
Sub-Index	003
Description	Restore Application Default Parameters
Data Type	UNSIGNED32
Access	RW
PDO Mapping	No
Default Value	0x00000000
Sub-Index	004
Description	Restore Manufacturers Default Parameters
Data Type	UNSIGNED32
Access	RW
PDO Mapping	No
Default Value	0x00000000

7.2.12 Object 1014h: COB-ID EMCY

COB-ID used for emergency message (Emergency Producer).

INDEX	1014
Name	COB-ID EMCY
Object Code	Variable
Data Type	UNSIGNED32
Access	RO
PDO Mapping	No
Default Value	0x00000080

7.2.13 Object 1015h: Inhibit Time Emergency

Inhibit Time used for emergency message (Emergency Producer).
The time has to be a multiple of 100 us.

INDEX	1015
Name	Inhibit Time Emergency
Object Code	Variable
Data Type	UNSIGNED16
Access	RW
PDO Mapping	No
Default Value	0x0

7.2.14 Object 1016h: Heartbeat Consumer Entries

The consumer heartbeat time defines the expected heartbeat cycle time and thus has to be higher than the corresponding producer heartbeat time configured on the device producing this heartbeat.

The bits 31 - 24 of each sub-index has to be 0.
The bits 23 - 16 contain the node-id.
The lower 16 bits contain the heartbeat time

INDEX	1016
Name	Heartbeat Consumer Entries
Object Code	Array
Data Type	UNSIGNED32

Sub-Index	000
Description	Number of Entries
Access	RO
PDO Mapping	No
Default Value	0x02
Sub-Index	001
Description	Consumer Heartbeat Time 1
Data Type	UNSIGNED32
Access	RW
PDO Mapping	No
Default Value	0x00000000
Sub-Index	002
Description	Consumer Heartbeat Time 2
Data Type	UNSIGNED32
Access	RW
PDO Mapping	No
Default Value	0x00000000

7.2.15 Object 1017h: Producer Heartbeat Time

The producer heartbeat time defines the cycle time of the heartbeat. If the time is 0 it is not used. The time has to be a multiple of 1 msec

INDEX	1017
Name	Producer Heartbeat Time
Object Code	Variable
Data Type	UNSIGNED16
Access	RW
PDO Mapping	No
Default Value	0x00000000

7.2.16 Object 1018h: Identity Object

This object contains general information about the device.
Sub-Index 1 contains a unique value allocated each manufacturer.
Sub-Index 2 identifies the manufacturer specific product code (device version).
Sub-Index 3 contains the revision number. Bit 31-16 is the major revision number and Bit 15-0 the minor revision number.
Sub-Index 4 identified a manufacturer specific serial number.

INDEX	1018
Name	Identity Object
Object Code	Record
Data Type	IDENTITY

Sub-Index	000
Description	number of entries
Access	RO
PDO Mapping	No
Default Value	0x4
Sub-Index	001
Description	Vendor Id
Data Type	UNSIGNED32
Access	RO
PDO Mapping	No
Default Value	0x000003AD
Sub-Index	002
Description	Product Code
Data Type	UNSIGNED32
Access	RO
PDO Mapping	No
Default Value	0x01

Sub-Index	003
Description	Revision number
Data Type	UNSIGNED32
Access	RO
PDO Mapping	No
Default Value	0x0
Sub-Index	004
Description	Serial number
Data Type	UNSIGNED32
Access	RO
PDO Mapping	No
Default Value	0

7.2.17 Object 1019h: Synchronous counter overflow value

The synchronous counter defines if a counter is mapped into the SYNC message and the highest value the counter can reach.

Value	Meaning
0	SYNC message transmitted with length 0
1	reserved
2 .. 240	SYNC message transmitted with legnth 1, first data byte contains the counter value
241..255	reserved

INDEX	1019
Name	Synchronous counter overflow value
Object Code	Variable
Data Type	UNSIGNED8

Access	RW
PDO Mapping	No
Default Value	0x00000000

7.2.18 Object 1029h: Error Behaviour

Sub index 000 contains the number of error classes.
Sub index 001 contains the error class for a communication error.
Sub indices 001 to 254 contain device profile or manufacturer specific error classes.

The value of an error class can be:
0 = pre - operational
1 = no state change
2 = stopped
3 .. 127 reserved

INDEX	1029
Name	Error Behaviour
Object Code	Array
Data Type	UNSIGNED8

Sub-Index	000
Description	Number of Entries
Access	RO
PDO Mapping	No
Default Value	1
Sub-Index	001
Description	Communication Error
Data Type	UNSIGNED8
Access	RW
PDO Mapping	No
Default Value	0x0

7.2.19 Object 1200h: Server SDO Parameter 1

The object contains the parameters for the SDOs for which the device is the server.

INDEX	1200
Name	Server SDO Parameter 1
Object Code	Record
Data Type	SDO_PARAMETER

Sub-Index	000
Description	Number of Entries
Access	RO
PDO Mapping	No
Default Value	2
Sub-Index	001
Description	COB-ID Client -> Server
Data Type	UNSIGNED32
Access	RO
PDO Mapping	No
Default Value	0x00000600
Sub-Index	002
Description	COB-ID Server -> Client
Data Type	UNSIGNED32
Access	RO
PDO Mapping	No
Default Value	0x00000580

7.2.20 Object 1801h: Transmit PDO Communication Parameter 2

It contains the communication parameters of the current PDO the device is able to transmit.
Sub-index 0 contains the number of PDO-parameters implemented.
Sub index 1 describes the COB-ID. If bit 31 is set the PDO is disabled.
The transmission mode is defined by sub-index 2.
An inhibit time can be defined on sub-index 3 in 100 us.
At the 5th sub-index can be defined an event time for asynchron pdos.

INDEX	1801
Name	Transmit PDO Communication Parameter 2
Object Code	Record
Data Type	PDO_COMM_PAR

Sub-Index	000
Description	Number of Entries
Access	RO
PDO Mapping	No
Default Value	0x06
Sub-Index	001
Description	COB-ID
Data Type	UNSIGNED32
Access	RW
PDO Mapping	No
Default Value	0x00000280
Sub-Index	002
Description	Transmission Type
Data Type	UNSIGNED8
Access	RW
PDO Mapping	No
Default Value	0xFF

Sub-Index	003
Description	Inhibit Time
Data Type	UNSIGNED16
Access	RW
PDO Mapping	No
Default Value	0x0
Unit	100 us
Sub-Index	004
Description	Compatibility Entry
Data Type	UNSIGNED8
Access	RW
PDO Mapping	No
Default Value	0x00
Sub-Index	005
Description	Event Timer
Data Type	UNSIGNED16
Access	RW
PDO Mapping	No
Default Value	0x0
Unit	ms
Sub-Index	006
Description	Sync start value
Data Type	UNSIGNED8
Access	RW
PDO Mapping	No
Default Value	0x0

7.2.21 Object 1802h: Transmit PDO Communication Parameter 3

It contains the communication parameters of the current PDO the device is able to transmit.
Sub-index 0 contains the number of PDO-parameters implemented.
Sub index 1 describes the COB-ID. If bit 31 is set the PDO is disabled.
The transmission mode is defined by sub-index 2.
An inhibit time can be defined on sub-index 3 in 100 us.
At the 5th sub-index can be defined an event time for asynchron pdos.

INDEX	1802
Name	Transmit PDO Communication Parameter 3
Object Code	Record
Data Type	PDO_COMM_PAR

Sub-Index	000
Description	Number of Entries
Access	RO
PDO Mapping	No
Default Value	0x06
Sub-Index	001
Description	COB-ID
Data Type	UNSIGNED32
Access	RW
PDO Mapping	No
Default Value	0x00000380
Sub-Index	002
Description	Transmission Type
Data Type	UNSIGNED8
Access	RW
PDO Mapping	No
Default Value	0xFF

Sub-Index	003
Description	Inhibit Time
Data Type	UNSIGNED16
Access	RW
PDO Mapping	No
Default Value	0x0
Unit	100 us
Sub-Index	004
Description	Compatibility Entry
Data Type	UNSIGNED8
Access	RW
PDO Mapping	No
Default Value	0x00
Sub-Index	005
Description	Event Timer
Data Type	UNSIGNED16
Access	RW
PDO Mapping	No
Default Value	0x0
Unit	ms
Sub-Index	006
Description	Sync start value
Data Type	UNSIGNED8
Access	RW
PDO Mapping	No
Default Value	0x0

7.2.22 Object 1803h: Transmit PDO Communication Parameter 4

It contains the communication parameters of the current PDO the device is able to transmit.
Sub-index 0 contains the number of PDO-parameters implemented.
Sub index 1 describes the COB-ID. If bit 31 is set the PDO is disabled.
The transmission mode is defined by sub-index 2.
An inhibit time can be defined on sub-index 3 in 100 us.
At the 5th sub-index can be defined an event time for asynchron pdos.

INDEX	1803
Name	Transmit PDO Communication Parameter 4
Object Code	Record
Data Type	PDO_COMM_PAR

Sub-Index	000
Description	Number of Entries
Access	RO
PDO Mapping	No
Default Value	0x06
Sub-Index	001
Description	COB-ID
Data Type	UNSIGNED32
Access	RW
PDO Mapping	No
Default Value	0x00000380
Sub-Index	002
Description	Transmission Type
Data Type	UNSIGNED8
Access	RW
PDO Mapping	No
Default Value	0xFF
Sub-Index	003

Description	Inhibit Time
Data Type	UNSIGNED16
Access	RW
PDO Mapping	No
Default Value	0x0
Unit	100 us
Sub-Index	004
Description	Compatibility Entry
Data Type	UNSIGNED8
Access	RW
PDO Mapping	No
Default Value	0x00
Sub-Index	005
Description	Event Timer
Data Type	UNSIGNED16
Access	RW
PDO Mapping	No
Default Value	0x0
Unit	ms
Sub-Index	006
Description	Sync start value
Data Type	UNSIGNED8
Access	RW
PDO Mapping	No
Default Value	0x0

7.2.23 Object 1804h: Transmit PDO Communication Parameter 5

It contains the communication parameters of the current PDO the device is able to transmit.
Sub-index 0 contains the number of PDO-parameters implemented.
Sub index 1 describes the COB-ID. If bit 31 is set the PDO is disabled.
The transmission mode is defined by sub-index 2.
An inhibit time can be defined on sub-index 3 in 100 us.
At the 5th sub-index can be defined an event time for asynchron pdos.

INDEX	1804
Name	Transmit PDO Communication Parameter 5
Object Code	Record
Data Type	PDO_COMM_PAR

Sub-Index	000
Description	Number of Entries
Access	RO
PDO Mapping	No
Default Value	0x06
Sub-Index	001
Description	COB-ID
Data Type	UNSIGNED32
Access	RW
PDO Mapping	No
Default Value	0x00000380
Sub-Index	002
Description	Transmission Type
Data Type	UNSIGNED8
Access	RW
PDO Mapping	No
Default Value	0xFF
Sub-Index	003

Description	Inhibit Time
Data Type	UNSIGNED16
Access	RW
PDO Mapping	No
Default Value	0x0
Unit	100 us
Sub-Index	004
Description	Compatibility Entry
Data Type	UNSIGNED8
Access	RW
PDO Mapping	No
Default Value	0x00
Sub-Index	005
Description	Event Timer
Data Type	UNSIGNED16
Access	RW
PDO Mapping	No
Default Value	0x0
Unit	ms
Sub-Index	006
Description	Sync start value
Data Type	UNSIGNED8
Access	RW
PDO Mapping	No
Default Value	0x0

7.2.24 Object 1A00h: Transmit PDO Mapping Parameter 2

Contains the mapping for the PDOs the device is able to transmit.
The type of the PDO mapping parameter is at index 21h.
The subindex 0h contains the number of valid entries within the mapping record.
This number of entries is also the number of the application variables which shall be transmitted with the corresponding PDO.
The subindices from 1h to number of entries contain the information about the mapped application variables.
These entries describe the PDO contents by their index, subindex and length.
All three values are hexa-decimal coded.
The length entry contains the length of the object in bits (1..40h).
This parameter can be used to verify the overall mapping length. It is mandatory.

INDEX	1A01
Name	Transmit PDO Mapping Parameter 2
Object Code	Record
Data Type	PDO_MAPPING

Sub-Index	000
Description	Number of Entries
Access	RW
PDO Mapping	No
Default Value	0x04
Sub-Index	001
Description	Mapping Entry 1
Data Type	UNSIGNED32
Access	RW
PDO Mapping	No
Default Value	0x64010110
Sub-Index	002
Description	Mapping Entry 2
Data Type	UNSIGNED32
Access	RW

PDO Mapping	No
Default Value	0x64010210
Sub-Index	003
Description	Mapping Entry 3
Data Type	UNSIGNED32
Access	RW
PDO Mapping	No
Default Value	0x64010310
Sub-Index	004
Description	Mapping Entry 4
Data Type	UNSIGNED32
Access	RW
PDO Mapping	No
Default Value	0x64010410

7.2.25 Object 1A02h: Transmit PDO Mapping Parameter 3

Contains the mapping for the PDOs the device is able to transmit.
The type of the PDO mapping parameter is at index 21h.
The subindex 0h contains the number of valid entries within the mapping record.
This number of entries is also the number of the application variables which shall be transmitted with the corresponding PDO.
The subindices from 1h to number of entries contain the information about the mapped application variables.
These entries describe the PDO contents by their index, subindex and length.
All three values are hexa-decimal coded.
The length entry contains the length of the object in bits (1..40h).
This parameter can be used to verify the overall mapping length. It is mandatory

INDEX	1A02
Name	Transmit PDO Mapping Parameter 3
Object Code	Record
Data Type	PDO_MAPPING

Sub-Index	000

Description	Number of Entries
Access	RW
PDO Mapping	No
Default Value	0x04
Sub-Index	001
Description	Mapping Entry 1
Data Type	UNSIGNED32
Access	RW
PDO Mapping	No
Default Value	0x64010510
Sub-Index	002
Description	Mapping Entry 2
Data Type	UNSIGNED32
Access	RW
PDO Mapping	No
Default Value	0x64010610
Sub-Index	003
Description	Mapping Entry 3
Data Type	UNSIGNED32
Access	RW
PDO Mapping	No
Default Value	0x64010710
Sub-Index	004
Description	Mapping Entry 4
Data Type	UNSIGNED32
Access	RW

PDO Mapping	No
Default Value	0x64010810

7.2.26 Object 1A03h: Transmit PDO Mapping Parameter 4

Contains the mapping for the PDOs the device is able to transmit.
The type of the PDO mapping parameter is at index 21h.
The subindex 0h contains the number of valid entries within the mapping record.
This number of entries is also the number of the application variables which shall be transmitted with the corresponding PDO.
The subindices from 1h to number of entries contain the information about the mapped application variables.
These entries describe the PDO contents by their index, subindex and length.
All three values are hexa-decimal coded.
The length entry contains the length of the object in bits (1..40h).
This parameter can be used to verify the overall mapping length. It is mandatory

INDEX	1A03
Name	Transmit PDO Mapping Parameter 4
Object Code	Record
Data Type	PDO_MAPPING

Sub-Index	000
Description	Number of Entries
Access	RW
PDO Mapping	No
Default Value	0x02
Sub-Index	001
Description	Mapping Entry 1
Data Type	UNSIGNED32
Access	RW
PDO Mapping	No
Default Value	0x64030120
Sub-Index	002
Description	Mapping Entry 2

Data Type	UNSIGNED32
Access	RW
PDO Mapping	No
Default Value	0x64030220

7.2.27 Object 1A04h: Transmit PDO Mapping Parameter 5

Contains the mapping for the PDOs the device is able to transmit.
The type of the PDO mapping parameter is at index 21h.
The subindex 0h contains the number of valid entries within the mapping record.
This number of entries is also the number of the application variables which shall be transmitted with the corresponding PDO.
The subindices from 1h to number of entries contain the information about the mapped application variables.
These entries describe the PDO contents by their index, subindex and length.
All three values are hexa-decimal coded.
The length entry contains the length of the object in bits (1..40h).
This parameter can be used to verify the overall mapping length. It is mandatory

INDEX	1A04
Name	Transmit PDO Mapping Parameter 5
Object Code	Record
Data Type	PDO_MAPPING

Sub-Index	000
Description	Number of Entries
Access	RW
PDO Mapping	No
Default Value	0x02
Sub-Index	001
Description	Mapping Entry 1
Data Type	UNSIGNED32
Access	RW
PDO Mapping	No
Default Value	0x64030320

Sub-Index	002
Description	Mapping Entry 2
Data Type	UNSIGNED32
Access	RW
PDO Mapping	No
Default Value	0x64030420

7.3 Manufacturer Segment

7.3.1 Object 2001h: Module ID

INDEX	2001
Name	Module ID
Object Code	Variable
Data Type	UNSIGNED8
Access	RW
PDO Mapping	No
Default Value	0x7F

7.3.2 Object 2002h: Module Baud Rate

INDEX	2002
Name	Module Baud Rate
Object Code	Variable
Data Type	UNSIGNED8
Access	RW
PDO Mapping	No
Default Value	0x04

7.3.3 Object 2003h: Module DIP Switch

INDEX	2003
Name	Module DIP Switch
Object Code	Variable
Data Type	UNSIGNED8
Access	RO
PDO Mapping	No
Default Value	0x00

7.3.4 Object 2310h: Analog Input Enable

The Input Enable is used to enable each Thermocouple input. The default is 0x01 which is enabled. To disable the input zero must be written to the variable.

INDEX	2310
Name	Analog Input Enable
Object Code	Array
Data Type	UNSIGNED8

Sub-Index	000
Description	Number of Elements
Access	RW
PDO Mapping	No
Default Value	0x4
Sub-Index	001
Description	Analog Input 1 Enable
Data Type	UNSIGNED8
Access	RW
PDO Mapping	No

Default Value	0x1
Sub-Index	002
Description	Analog Input 2 Enable
Data Type	UNSIGNED8
Access	RW
PDO Mapping	No
Default Value	0x1
Sub-Index	003
Description	Analog Input 3 Enable
Data Type	UNSIGNED8
Access	RW
PDO Mapping	No
Default Value	0x1
Sub-Index	004
Description	Analog Input 4 Enable
Data Type	UNSIGNED8
Access	RW
PDO Mapping	No
Default Value	0x1

7.3.5 Object 2314h: Analog Input Line Frequency

The line frequency is used by the A/D to select the correct digital filter. Valid values are 50 or 60. The one setting is used for all of the inputs.

INDEX	2314
Name	Analog Input Line Frequency
Object Code	Variable
Data Type	UNSIGNED8

Access	RW
PDO Mapping	No
Default Value	0x32

7.3.6 Object 2318h: Analog Input Sample Rate

The sample rate of the input can be changed according to the following settings:

0 – 120ms (8 samples/sec) This setting uses hardware filters for 50Hz or 60Hz rejection.
1 – 60ms (16 samples/sec)
2 – 40ms (25 samples/sec)
3 – 20ms (50 samples/sec)

INDEX	2318
Name	Analog Input Sample Rate
Object Code	Array
Data Type	UNSIGNED8

Sub-Index	000
Description	Number of Elements
Access	RW
PDO Mapping	No
Default Value	0x4
Sub-Index	001
Description	Analog Input Sample Rate 1

Data Type	UNSIGNED8
Access	RW
PDO Mapping	No
Default Value	0x0000
Sub-Index	002
Description	Analog Input Sample Rate 2
Data Type	UNSIGNED8
Access	RW
PDO Mapping	No
Default Value	0x0000
Sub-Index	003
Description	Analog Input Sample Rate 3
Data Type	UNSIGNED8
Access	RW
PDO Mapping	No
Default Value	0x0000
Sub-Index	004
Description	Analog Input Sample Rate 4
Data Type	UNSIGNED8
Access	RW
PDO Mapping	No
Default Value	0x0000

7.3.7 Object 2320h: Calibrate Channel Number

INDEX	2320
Name	Calibrate Channel Number
Object Code	Variable
Data Type	UNSIGNED8

Access	RW
PDO Mapping	No
Default Value	0x1

7.3.8 Object 2321h: Calibrate Control

INDEX	2321
Name	Calibrate Control
Object Code	Variable
Data Type	UNSIGNED8

Access	RW
PDO Mapping	No
Default Value	0x00

7.3.9 Object 2323h: Calibrate Raw Data

INDEX	2323
Name	Calibrate Raw Data
Object Code	Variable
Data Type	INTEGER16

Access	RO

PDO Mapping	No
Default Value	0x00

7.3.10 Object 2340h: Analog Input Status

Bit 0 – Input 1 status
Bit 2 – Input 2 status
Bit 4 – Input 3 status
Bit 6 – Input 4 status

INDEX	2340
Name	Analog Input Status
Object Code	Variable
Data Type	UNSIGNED16

Access	RO
PDO Mapping	No
Default Value	0x00

7.4 Device Profile Segment

7.4.1 Object 6401h: Read Analog Input 16 Bit

Reads the value of the input channel n (unconverted).
Value is 16 bits wide or less. The value is always left adjusted.

INDEX	6401
Name	Read Analog Input 16 Bit
Object Code	Array
Data Type	INTEGER16

Sub-Index	000
Description	Number of Elements
Access	RO
PDO Mapping	No
Default Value	0x4
Sub-Index	001
Description	16-Bit analog Input 1
Data Type	INTEGER16
Access	RO
PDO Mapping	Yes
Default Value	0x0000
Sub-Index	002
Description	16-Bit analog Input 2
Data Type	INTEGER16
Access	RO
PDO Mapping	Yes
Default Value	0x0000
Sub-Index	003
Description	16-Bit analog Input 3

Data Type	INTEGER16
Access	RO
PDO Mapping	Yes
Default Value	0x0000
Sub-Index	004
Description	16-Bit analog Input 4
Data Type	INTEGER16
Access	RO
PDO Mapping	Yes
Default Value	0x0000

7.4.2 Object 6403h: Read Analog Input float

Reads the value of the input channel n (float).
The values are 4-byte float type values.

INDEX	6403
Name	Read Analog Input float
Object Code	Array
Data Type	REAL32

Sub-Index	000
Description	Number of Elements
Access	RO
PDO Mapping	No
Default Value	5.6051938573e-045
Sub-Index	001
Description	Analog Input 1 (float)
Data Type	REAL32
Access	RO

PDO Mapping	Yes
Default Value	0.0
Sub-Index	002
Description	Analog Input 2 (float)
Data Type	REAL32
Access	RO
PDO Mapping	Yes
Default Value	0.0
Sub-Index	003
Description	Analog Input 3 (float)
Data Type	REAL32
Access	RO
PDO Mapping	Yes
Default Value	0.0
Sub-Index	004
Description	Analog Input 4 (float)
Data Type	REAL32
Access	RO
PDO Mapping	Yes
Default Value	0.0

7.4.3 Object 6423h: Global Analog Interrupt Enable

Globally enable/disable analogue input interrupts.
By default, no analogue input activates an interrupt.

INDEX	6423
Name	Global Analog Interrupt Enable
Object Code	Variable
Data Type	BOOLEAN

Access	RW
PDO Mapping	No
Default Value	0

7.4.4 Object 6424h: Analog Input Interrupt Upper Limit

When enabled, interrupt triggered when analogue input rises above this value.

INDEX	6424
Name	Analog Input Interrupt Upper Limit
Object Code	Array
Data Type	INTEGER16

Sub-Index	000
Description	Number of Elements
Access	RO
PDO Mapping	No
Default Value	0x4
Sub-Index	001
Description	Upper Limit Analog Input 1
Data Type	INTEGER16
Access	RW

PDO Mapping	No
Default Value	0x4E20
Sub-Index	002
Description	Upper Limit Analog Input 2
Data Type	INTEGER16
Access	RW
PDO Mapping	No
Default Value	0x4E20
Sub-Index	003
Description	Upper Limit Analog Input 3
Data Type	INTEGER16
Access	RW
PDO Mapping	No
Default Value	0x4E20
Sub-Index	004
Description	Upper Limit Analog Input 4
Data Type	INTEGER16
Access	RW
PDO Mapping	No
Default Value	0x4E20

7.4.5 Object 6425h: Analog Input Interrupt Lower Limit

When enabled, interrupt triggered when analogue input falls below this value.

INDEX	6425
Name	Analog Input Interrupt Lower Limit
Object Code	Array
Data Type	INTEGER16

Sub-Index	000
Description	Number of Elements
Access	RO
PDO Mapping	No
Default Value	0x4
Sub-Index	001
Description	Lower Limit Analog Input 1
Data Type	INTEGER16
Access	RW
PDO Mapping	No
Default Value	0xF63C
Sub-Index	002
Description	Lower Limit Analog Input 2
Data Type	INTEGER16
Access	RW
PDO Mapping	No
Default Value	0xF63C
Sub-Index	003
Description	Lower Limit Analog Input 3
Data Type	INTEGER16

Access	RW
PDO Mapping	No
Default Value	0xF63C
Sub-Index	004
Description	Lower Limit Analog Input 4
Data Type	INTEGER16
Access	RW
PDO Mapping	No
Default Value	0xF63C

7.4.6 Object 6426h: Analog Input Interrupt Delta

When enabled, the interrupt triggers when the analogue input changes by more than this value from the last communicated value. (rising or falling).

INDEX	6426
Name	Analog Input Interrupt Delta
Object Code	Array
Data Type	UNSIGNED16

Sub-Index	000
Description	Number of Elements
Access	RO
PDO Mapping	No
Default Value	0x4
Sub-Index	001
Description	Delta Limit Analog Input 1
Data Type	UNSIGNED16
Access	RW
PDO Mapping	No

Default Value	0xA
Sub-Index	002
Description	Delta Limit Analog Input 2
Data Type	UNSIGNED16
Access	RW
PDO Mapping	No
Default Value	0xA
Sub-Index	003
Description	Delta Limit Analog Input 3
Data Type	UNSIGNED16
Access	RW
PDO Mapping	No
Default Value	0xA
Sub-Index	004
Description	Delta Limit Analog Input 4
Data Type	UNSIGNED16
Access	RW
PDO Mapping	No
Default Value	0xA

7.4.7 Object 6429h: Analog Input Interrupt Real Upper Limit

When enabled, interrupt triggers when analogue input oversteps this limit.

INDEX	6429
Name	Analog Input Interrupt Real Upper Limit
Object Code	Array
Data Type	REAL32

Sub-Index	000
Description	Number of Elements
Access	RO
PDO Mapping	No
Default Value	0x4
Sub-Index	001
Description	Upper Limit Real Analog Input 1
Data Type	REAL32
Access	RW
PDO Mapping	No
Default Value	2000.0
Sub-Index	002
Description	Upper Limit Real Analog Input 2
Data Type	REAL32
Access	RW
PDO Mapping	No
Default Value	2000.0
Sub-Index	003
Description	Upper Limit Real Analog Input 3
Data Type	REAL32

Access	RW
PDO Mapping	No
Default Value	2000.0
Sub-Index	004
Description	Upper Limit Real Analog Input 4
Data Type	REAL32
Access	RW
PDO Mapping	No
Default Value	2000.0

7.4.8 Object 642Ah: Analog Input Interrupt Real Lower Limit

When enabled, interrupt triggered when analogue input under steps this limit.

INDEX	642A
Name	Analog Input Interrupt Real Lower Limit
Object Code	Array
Data Type	REAL32

Sub-Index	000
Description	Number of Elements
Access	RO
PDO Mapping	No
Default Value	0x4
Sub-Index	001
Description	Lower Limit Real Analog Input 1
Data Type	REAL32
Access	RW
PDO Mapping	No

Default Value	-250.0
Sub-Index	002
Description	Lower Limit Real Analog Input 2
Data Type	REAL32
Access	RW
PDO Mapping	No
Default Value	-250.0
Sub-Index	003
Description	Lower Limit Real Analog Input 3
Data Type	REAL32
Access	RW
PDO Mapping	No
Default Value	-250.0
Sub-Index	004
Description	Lower Limit Real Analog Input 4
Data Type	REAL32
Access	RW
PDO Mapping	No
Default Value	-250.0

7.4.9 Object 642Bh: Analog Input Interrupt Real Delta

When enabled, the interrupt triggers when the analogue input changes by more than this value from the last sample (rising or falling).

INDEX	642B
Name	Analog Input Interrupt Real Delta
Object Code	Array
Data Type	REAL32

Sub-Index	000
Description	Number of Elements
Access	RO
PDO Mapping	No
Default Value	0x4
Sub-Index	001
Description	Delta Real Analog Input 1
Data Type	REAL32
Access	RW
PDO Mapping	No
Default Value	1.0
Sub-Index	002
Description	Delta Real Analog Input 2
Data Type	REAL32
Access	RW
PDO Mapping	No
Default Value	1.0
Sub-Index	003
Description	Delta Real Analog Input 3

Data Type	REAL32
Access	RW
PDO Mapping	No
Default Value	1.0
Sub-Index	004
Description	Delta Real Analog Input 4
Data Type	REAL32
Access	RW
PDO Mapping	No
Default Value	1.0

8. SAFETY GUIDELINES

8.1 Introduction

The IO Modules have been designed developed or manufactured for conventional use in industry. They were not designed, developed and manufactured for any use involving serious risks or hazards that without the implementation of exceptionally stringent safety precautions could lead to death, injury, serious physical damage or loss of any other kind. Such risks and hazards include in particular the use of these devices to monitor nuclear reactions in nuclear power plants, as well as flight control systems, flight safety, the control of mass transportation systems, medical life support systems, and the control of weapons systems.

When using IO Modules with programmable logic controllers and when using operating and monitoring devices as control systems in conjunction with a Soft PLC, the safety precautions applying to industrial control systems (e.g. the provision of safety devices such as emergency stop circuits, etc.) in accordance with applicable national and international regulations must be observed. The same applies for all other devices connected to the system, such as drives. All tasks such as installation, commissioning and service may only be carried out by qualified personnel. Qualified personnel are persons who are familiar with the transport, mounting, installation, commissioning and operation of the product and have the appropriate qualifications. National accident prevention guidelines must be followed. The safety guidelines, connection descriptions and limit values listed in the technical data must be read carefully before installation and commissioning and must be observed.

8.2 Intended Use

Electronic devices are generally not fail-safe. In the event of a failure on the IO Modules, operating or monitoring device or uninterruptible power supply, the user is responsible for ensuring that other devices that may be connected, such as motors, are made safe.

8.3 Transport and Storage

During transport and storage, devices must be protected from excessive stress (mechanical load, temperature, humidity, aggressive atmosphere).

8.4 Installation

- The installation must take place according to the documentation.
- The IO Modules are only allowed to be installed without voltage applied and by qualified personnel.
- General safety regulations and nationally applicable accident prevention guidelines must be observed.

Electrical installation must be carried out according to the relevant guidelines (e.g. line cross section, fuse, protective ground connection).